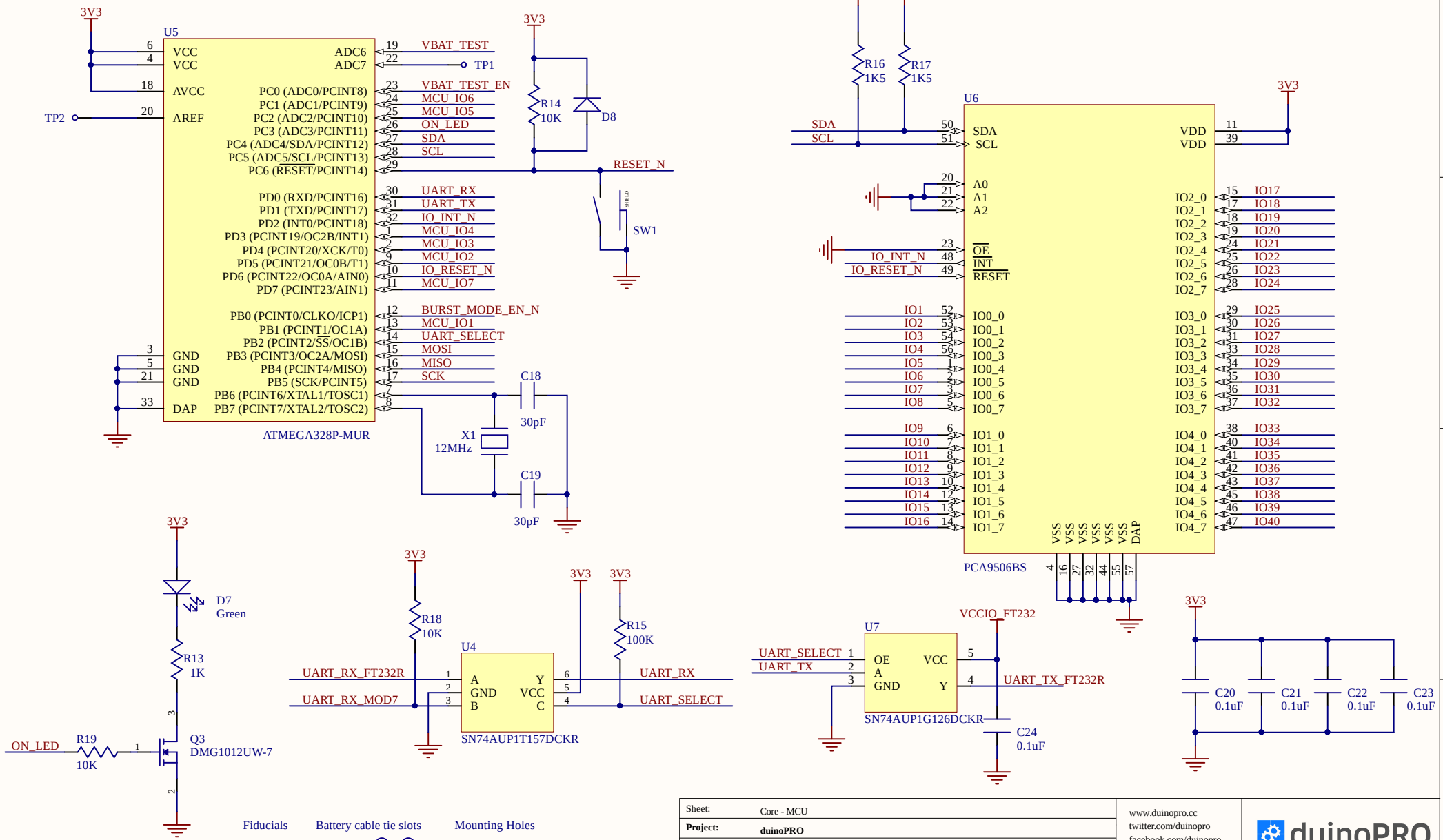

Copyright 2016

Sheet:	Core - MCU	www.duinopro.cc twitter.com/duinopro facebook.com/duinopro	duinoPRO from project to production
Project:	**duinoPRO**		
Board:	**UNO Baseboard 3x3**		
Drawing number:	AT000-0117		

Revision: 4.0.A	Assembly Variant: A	Date: 22/9/2016	Drawn by: KC	Checked by: RD	A4 1 of 4

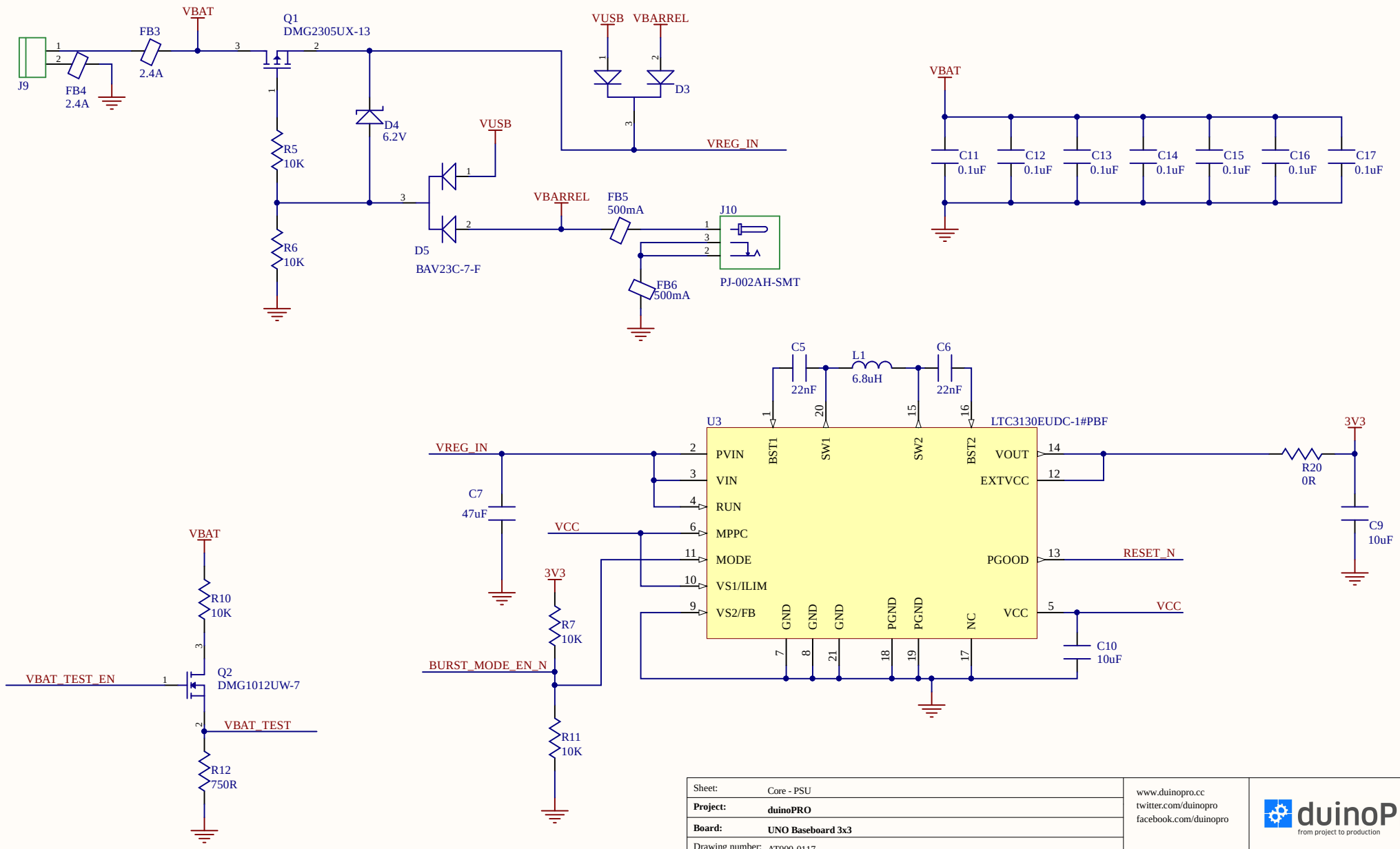

Copyright 2016

Sheet:	Core - PSU	www.duinopro.cc twitter.com/duinopro facebook.com/duinopro	duinoPRO from project to production
Project:	**duinoPRO**		
Board:	**UNO Baseboard 3x3**		
Drawing number:	AT000-0117		

Revision: 4.0.A	Assembly Variant: A	Date: 22/9/2016	Drawn by: KC	Checked by: RD	A4 2 of 4

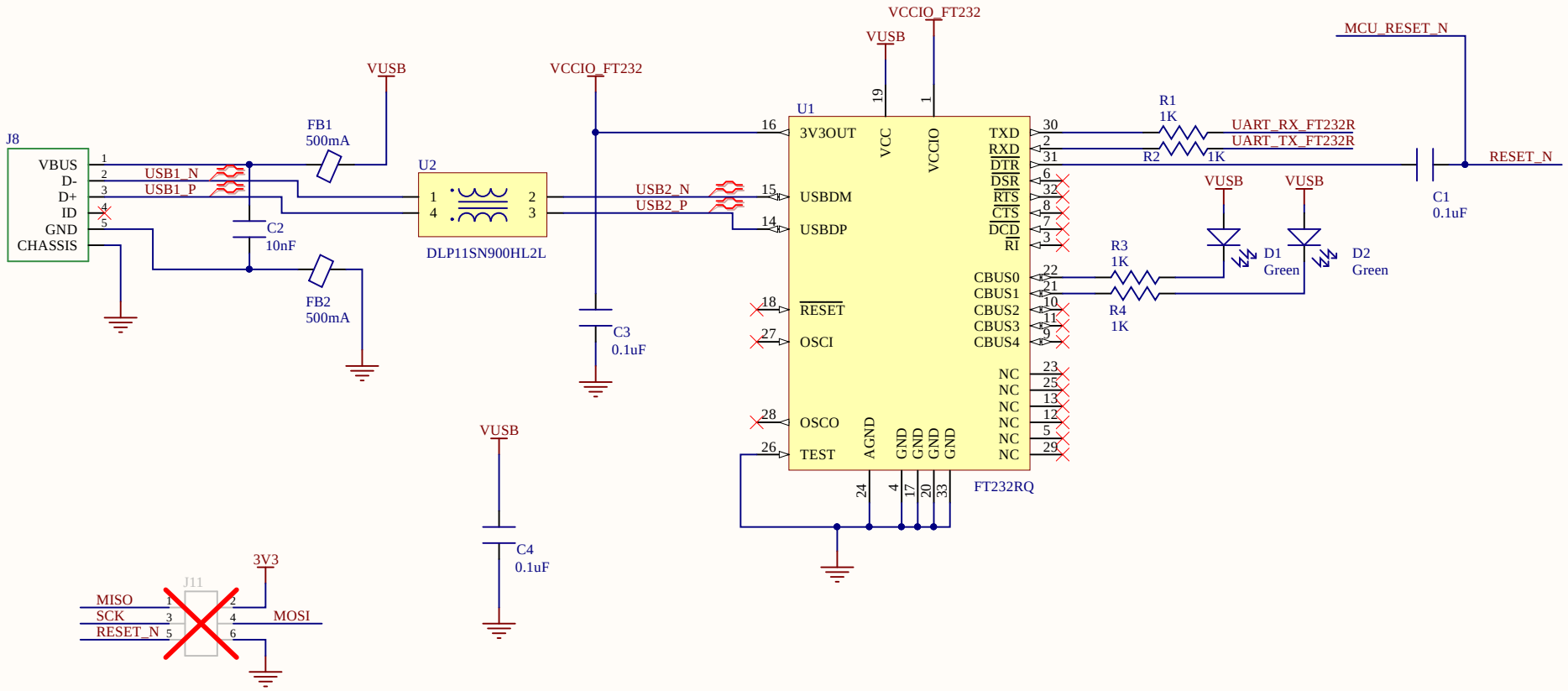

Copyright 2016

Sheet:	Core - Programming		www.duinopro.cc twitter.com/duinopro facebook.com/duinopro	duinoPRO from project to production	
Project:	**duinoPRO**				
Board:	**UNO Baseboard 3x3**				
Drawing number:	AT000-0117				
Revision: 4.0.A	Assembly Variant: A	Date: 22/9/2016	Drawn by: KC	Checked by: RD	A4 3 of 4

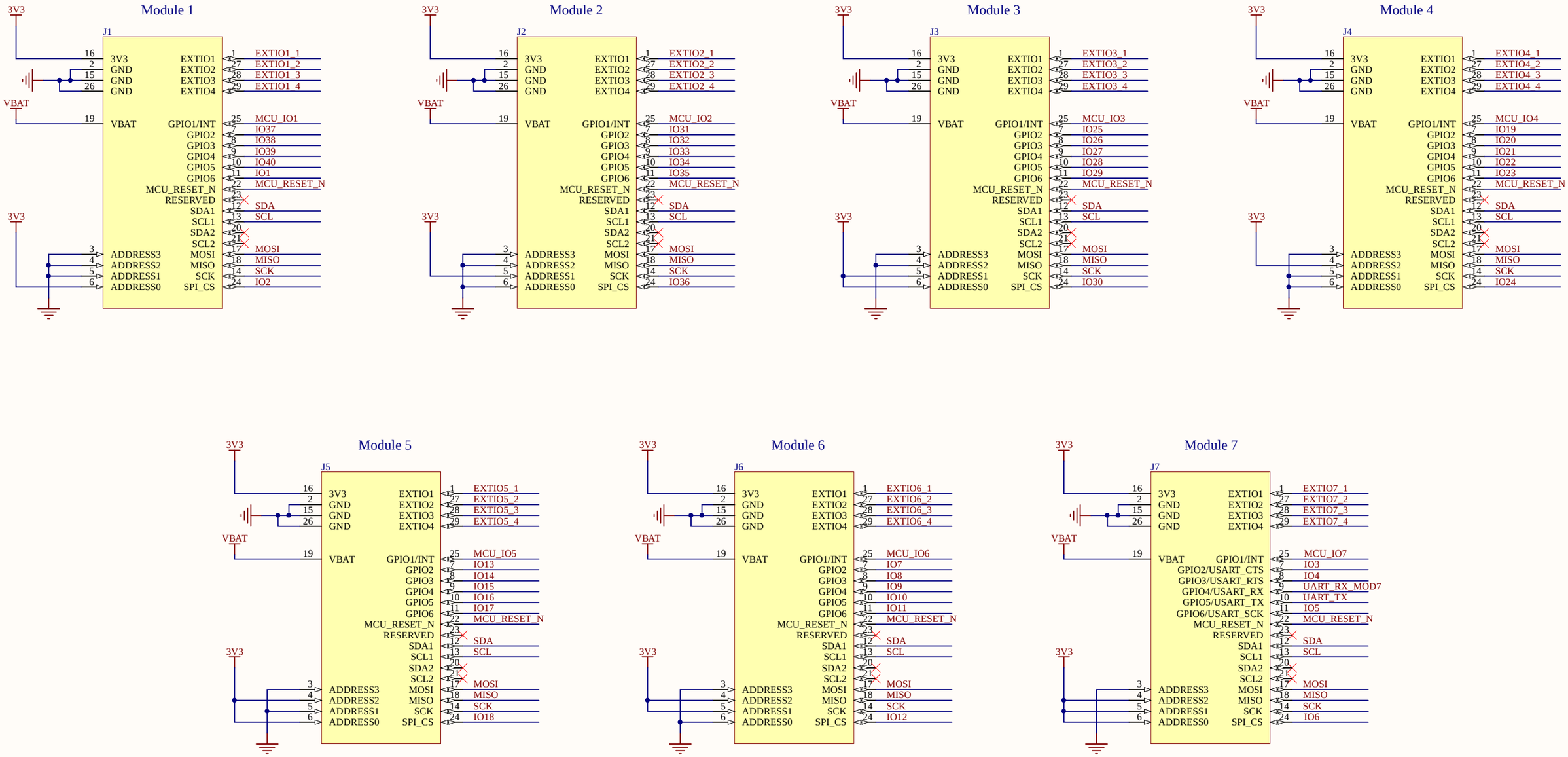

Copyright 2016

Sheet:	Module Breakout			www.duinopro.cc twitter.com/duinopro facebook.com/duinopro	duinoPRO from project to production
Project:	**duinoPRO**				
Board:	**UNO Baseboard 3x3**				
Drawing number:	AT000-0117				
Revision: 4.0.A	Assembly Variant: A	Date: 22/9/2016	Drawn by: KC	Checked by: RD	A3 4 of 4